Durable Stadium Lighting Solution

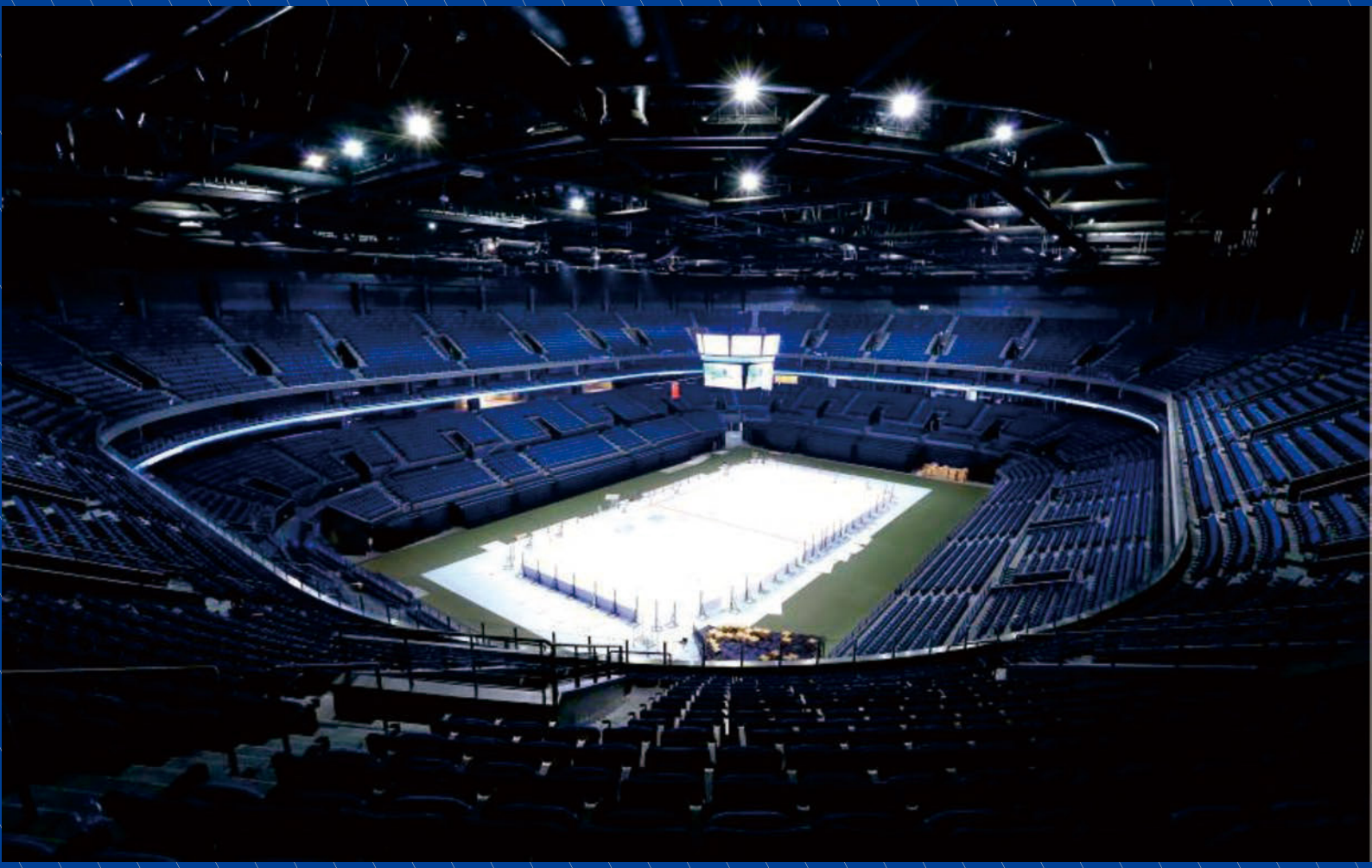

LED Flood Light

Q Series

Pan American
Professional Lighting Manufacturer

DongGuan Pan American Electronics Co., Ltd.



Product Description

Q series produce ideal light distribution with the highest reliability level - incredibly high over 93% total efficiency while saving up to 80% energy compared with traditional lighting. With die- cast aluminum(ADC12) housing, rugged and weather-tight design, this durable luminaire can withstand the most demanding elements, ideal for use in high vibration areas and extreme outdoor conditions. Its aesthetically pleasing design makes it a wonderful lighting scene in the environment.

Features

- RGB and RGBW are optional, intelligently controlled by DALI, DMX512.
- Modules can be adjusted individually and as a whole to suit different needs on the angle.
- Customers can purchase module components and assemble them by themselves, which can reduce shipping costs.
- Cold forging aluminum housing with polyester powder coated finish,excellent heat dissipation and corrosion resistance.
- High-quality optical material and various light distribution angles deliver ideal illumination and visual comfort.

Compliance

ETL
ENEC
CB
CE
SAA
RoHS
ErP
EMI

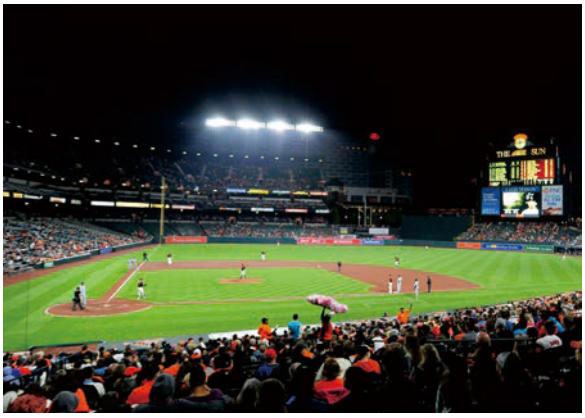

Application

- Sporting Facility
- Stadium
- Paper mills
- Container Loading Area
- Shipping Yard
- High Mast Roadway
- Airport
- Industrial Lighting
- Parking Lot
- Railway
- Port
- Public Square



Warranty

5-Year Standard Warranty
50,000 hrs L70B50@35°C



Technical Parameter

Electrical

Specification	SP-Q2xxxxW xyzp	SP-Q3xxxxW xyzp
Rated Power	500W/600W/700W	750W/900W/1050W
Input Voltage	AC120-277V/AC120-347V/AC277-480V	AC120-277V/AC120-347V/AC277-480V
Input Frequency	50/60Hz	50/60Hz
Power Factor	0.95	0.95
THD	<15%	<15%
Power Supply	Driver Brand: Inventronics/Sosen/Meanwell	Driver Brand: Inventronics/Sosen/Meanwell
Surge Protection	10kV	10kV

Optical

Specification	SP-Q2xxxxW xyzp	SP-Q3xxxxW xyzp
Lumen Output	65,000lm-105,000lm	97,500lm-157,500lm
Lumens Per Watt @Ra70	130lm/W, 150lm/W	130lm/W, 150lm/W
Beam Angle	15°/30°/45°/60°/90°/120°/T3VS	15°/30°/45°/60°/90°/120°/T3VS
LED Type	3030/5050	3030/5050
CCT	4000K/5000K/6500K/RGB(optional)/RGBW(optional)	
CRI	Ra70(Standard), Ra80(Optional)	Ra70(Standard), Ra80(Optional)
Dimming	0-10V Dimming	0-10V Dimming
Intelligent Control	DMX512/DALI (optional)	DMX512/DALI (optional)

Environmental

Specification	SP-Q2xxxxW xyzp	SP-Q3xxxxW xyzp
Ambient Operating Temperature	-40°C to 50°C (-40°F to 122°F)	-40°C to 50°C (-40°F to 122°F)

Mechanical

Specification	SP-Q2xxxxW xyzp	SP-Q3xxxxW xyzp
Housing Material	ADC12 Aluminum	ADC12 Aluminum
Lens Material	Anti-UV PC Optical Material	Anti-UV PC Optical Material
Protection	IP66/IK08	IP66/IK08
Mounting	Bracket	Bracket
EPA	1.16Ft²	1.76Ft²
Outlet Wire	Standard outlet length is 0.5-0.8 meters, and the outlet length can be customized	

Technical Parameter

Electrical

Specification	SP-Q4xxxxW xyzp
Rated Power	1200W/1400W
Input Voltage	AC120-277V/AC120-347V/AC277-480V
Input Frequency	50/60Hz
Power Factor	0.95
THD	<15%
Power Supply	Driver Brand: Inventronics/Sosen/Meanwell
Surge Protection	10kV

Optical

Specification	SP-Q4xxxxW xyzp
Lumen Output	156,000lm-210,000lm
Lumens Per Watt @Ra70	130lm/W, 150lm/W
Beam Angle	15°/30°/45°/60°/90°/120°/T3VS
LED Type	3030/5050
CCT	4000K/5000K/6500K/RGB(optional)/RGBW(optional)
CRI	Ra70(Standard), Ra80(Optional)
Dimming	0-10V Dimming
Intelligent Control	DMX512/DALI (optional)

Environmental

Specification	SP-Q4xxxxW xyzp
Ambient Operating Temperature	-40°C to 50°C (-40°F to 122°F)

Mechanical

Specification	SP-Q4xxxxW xyzp
Housing Material	ADC12 Aluminum
Lens Material	Anti-UV PC Optical Material
Protection	IP66/IK08
Mounting	Bracket
EPA	2.34Ft²
Outlet Wire	Standard outlet length is 0.5-0.8 meters, and the outlet length can be customized

Product Dimensions

SP-Q2xxxxW xyzp

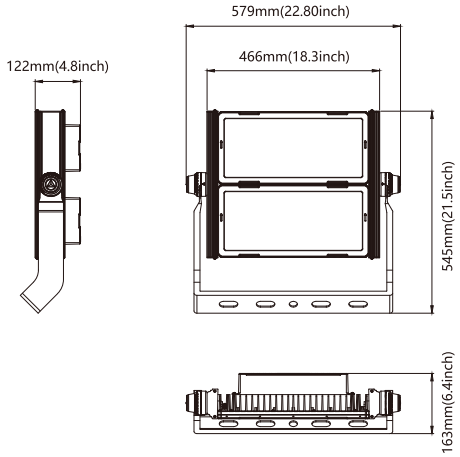

SP-Q3xxxxW xyzp

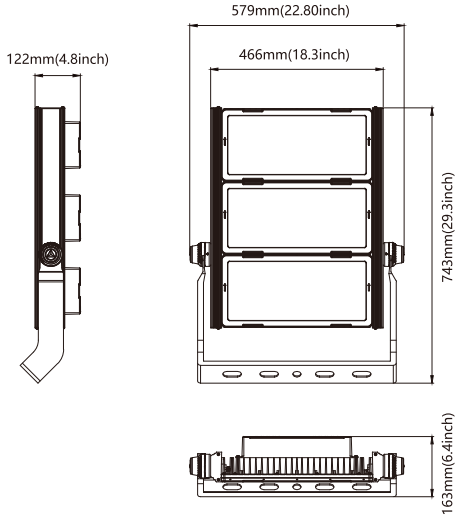

SP-Q4xxxxW xyzp

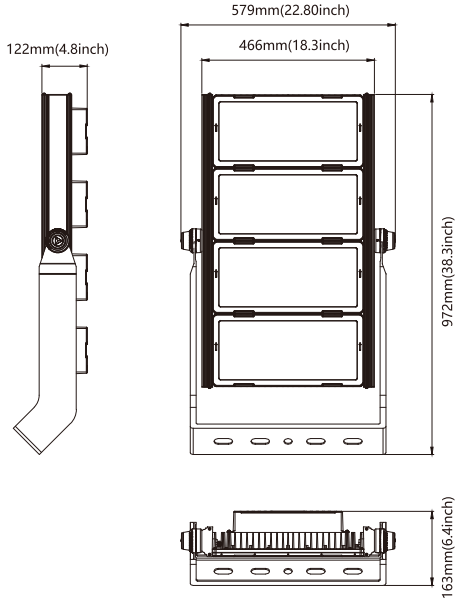

Packing Information

Model	Net Weight (Product)	Quantity/Carton	Gross Weight	Package Dimensions (LxWxH)
SP-Q2xxxxW xyzp	8.3kg (18.3lbs)	1 pc	11.4kg (25.1lbs)	624x631x250mm(24.6x24.8x9.8inch)
SP-Q3xxxxW xyzp	16.7kg (36. 8lbs)	1 pc	21. 1kg (46.5lbs)	822x631x250mm(32.4x24.8x9.8inch)
SP-Q4xxxxW xyzp	23.2kg (51.1lbs)	1 pc	29. 3kg (64. 6lbs)	1051x663x290mm(41.3x26.1x11.4inch)

Photometric

15 degree

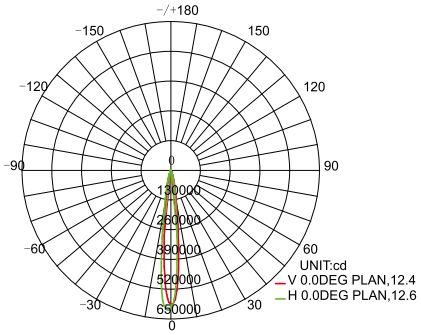

AVERAGE BEAM ANGLE(50%):12.5 DEG

30 degree

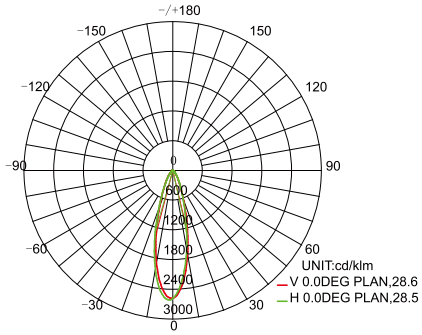

AVERAGE BEAM ANGLE(50%):28.5 DEG

45 degree

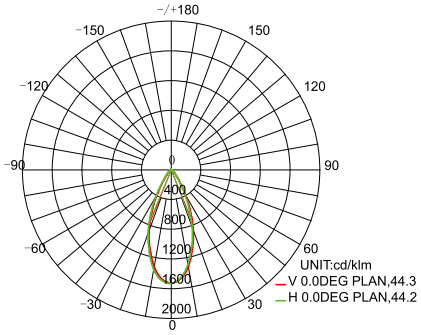

AVERAGE BEAM ANGLE(50%):44.3 DEG

60 degree

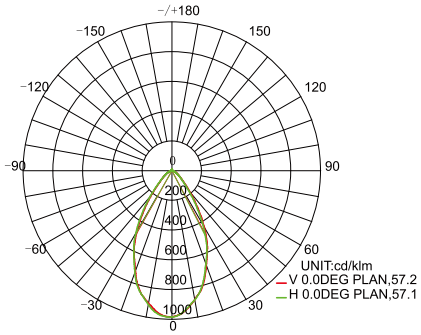

AVERAGE BEAM ANGLE(50%):57.2 DEG

90 degree

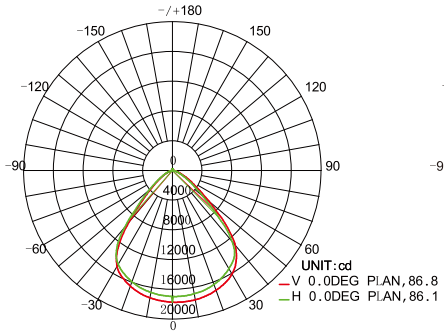

AVERAGE BEAM ANGLE(50%):86.5 DEG

120 Degree

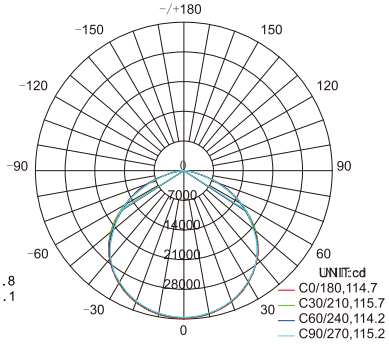

AVERAGE BEAM ANGLE(50%):114.9 DEG

T3VS

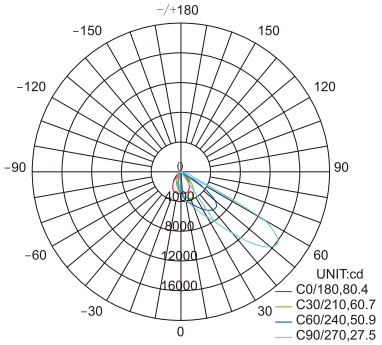

AVERAGE BEAM ANGLE(50%):54.9 DEG

Ordering Guide

SP	-	Qi	xxxxW	x	y	z	p
1		2	3	4	5	6	7

1. Model Series	2. Product Code	3. Wattage	4. Dimming Function
SP: Sports Light	Q2 Q3 Q4	Q2: 500/600/700W Q3: 750/900/1050W N4: 1200/1400W	D: dimmable N: non-dimmable

5. Color Temp.	6. Beam Angle	7. Brand Name of Driver
40: 4000K 50: 5000K 65: 6500K RGB: RGB RGBW: RGBW	A: 15˚, B: 30˚, C: 45˚, D: 60˚, E: 90˚, F: 120˚, I: T3VS(30X130˚)	Z: Zhihe, M: MEAN WELL, F: Philips (Signify), L: Lifud, S: Sosen, D: Daermay, Y: INVENTRONICS